ONE LEGGED MOUNT ASSEMBLY

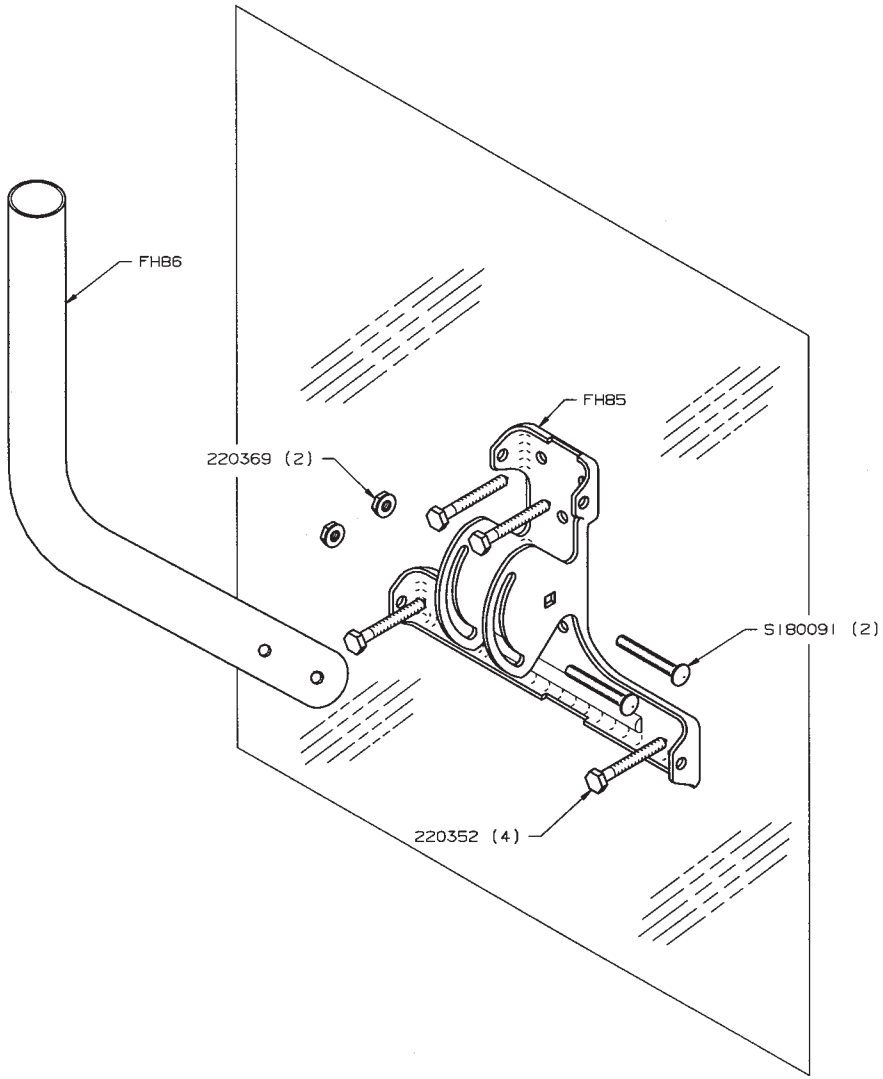

NOTES:

1.) ONE LEGGED MOUNT CAN BE INSTALLED ON A FLAT OR PITCHED ROOF, WOOD OR MASONARY WALL OR EAVE (GABLE END). WITH THE OPTIONAL ILGCM CHIMNEY MOUNT KIT, THE ONE LEGGED MOUNT CAN BE INSTALLED ON A MASONARY CHIMNEY.
2.) ALL ANTENNA INSTALLATIONS SHOULD BE GROUNDED BY THE INSTALLER TO MEET ALL APPLICABLE CODES.
3.) TO INSURE SAFETY, NO INSTALLATION, ROOF OR WALL, SHOULD BE ATTEMPTED WITHOUT A LOCAL PROFESSIONAL STUCTURAL ANALYSIS.
4.) INSPECT MOUNT AND ANTENNA INSTALLATION EVERY 6 MONTHS (OR AFTER EVERY STORM) FOR TIGHTNESS.
5.) IT IS THE INSTALLER'S RESPONSIBILITY TO VERIFY THAT HIS INSTALLATION IS ADEQUATE TO WITHSTAND ALL LOADS IMPOSED BY THIS MOUNT AND ANTENNA.
6.) LOCAL ZONING AND/OR BUILDING CODES AND INSURANCE COMPANIES MAY REQUIRE ARCHITECT OR STRUCTURAL ENGINEER APPROVAL PRIOR TO INSTALLATION.
7.) MOUNTING TUBE IS 1-1/4" O.D.
8.) ANTENNA NOT TO EXCEED 2 SQUARE FEET OF EFFECTIVE PROJECTED AREA.

ILG CONTAINS THE FOLLOWING:

FH85	FORMED BRACKET	(1)
FH86	1-1/4" O.D. TUBE	(1)
S180091	1/4" X 1-3/4" CARRIAGE BOLT	(2)
220369	1/4" FLANGE NUT	(2)
220352	1/4" X 2" LAG SCREW	(4)

ILGCM CONTAINS THE FOLLOWING:

FH88	CHIMNEY MOUNTING STRAP	(2)
FH87	HARDWARE BAG FOR CHIMNEY MOUNT	(1)

ROHN.

Title
ONE LEGGGED MOUNT ASSEMBLY

Scale: NONE
Unless otherwise specified, dimensions are given in inches. Tolerances are as noted.

Drawn by: TLO — Date: 6-6-96
Checked by — Date
Approved by Engineering — Date
Approved by Production — Date: 6/19/96
Approved by Sales — Date
Drawing Type : ELEV

Material | Finish | Weight

This drawing is the property of ROHN. It is not to be reproduced, copied or traced in part without our written consent.

File Number: EF4196TO
Drawing Number: C960119